IQXO-618

IQXO-618

LVDS output crystal oscillator in a hermetically sealed ceramic package with a seam sealed metal lid.

Model Name	Description
IQXO-618-25	**A 2.5V version**
IQXO-618-33	**A 3.3V version**

IQD Frequency Products Ltd □ Station Road □ Crewkerne □ Somerset □ TA18 8AR □ United Kingdom
Tel: +44 (0)1460 270200 □ Fax: +44 (0)1460 72578 □ Email: info@iqdfrequencyproducts.com
Registered in England No: 06478545 □ VAT Registration No: GB932 4502 45

Crystal Clock Oscillator Specification
IQXO-618-25

ISSUE 4; December 2023

Description

- LVDS output crystal oscillator in a hermetically sealed ceramic package with a seam sealed metal lid.
- Developed Frequencies: 25.0MHz, 50.0MHz, 80.0MHz, 100.0MHz, 125.0MHz, 133.3330MHz, 148.50MHz and 156.250MHz
- Note: Operating temperature ranges -40 to 105°C and -40 to 125°C are intended for industrial use and not for safety critical applications such as automotive. Please contact IQD for alternative options.

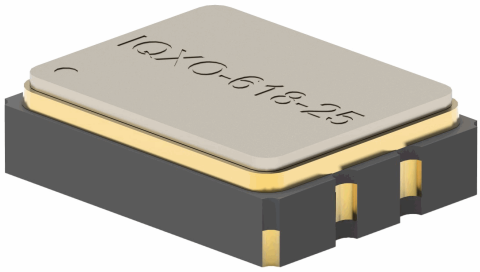

Frequency Parameters

- Frequency 13.50MHz to 156.250MHz
- Frequency Stability ±25.00ppm to ±100.00ppm
- Ageing ±3ppm max per year at 25°C

Electrical Parameters

- Supply Voltage 2.5V ±5%

Operating Temperature Ranges

- -10 to 70°C
- -40 to 85°C
- -40 to 105°C
- -40 to 125°C

Output Details

- Output Compatibility LVDS
- Drive Capability 100Ω
- Differential Output Voltage (VOD): 0.247V min, 0.33V typ, 0.454V max
- Offset Voltage (VOS): 1.125V min, 1.250V typ, 1.375V max.
- Output Voltage Levels:
  Output Low (VOL): 0.9V min
  Output High (VOH): 1.6V max

Output Control

- Standby Operation:
  Logic '1' (≥70% Vs) to pad 1 enables oscillator output.
  Logic '0' (≤30% Vs) to pad 1 disables oscillator output; when disabled the oscillator output goes to the high impedance state.
  No connection to pad 1 enables oscillator output.
- Start-Up Time: 10ms max
- Standby Current: 10µA max

Noise Parameters

- Phase Jitter (12kHz to 20MHz): 300fs rms max
- Phase Jitter (12kHz to 20MHz):
  @100MHz: 155fs rms typ
  @125MHz: 119fs rms typ
  @156.25MHz: 74fs rms typ

Outline (mm)

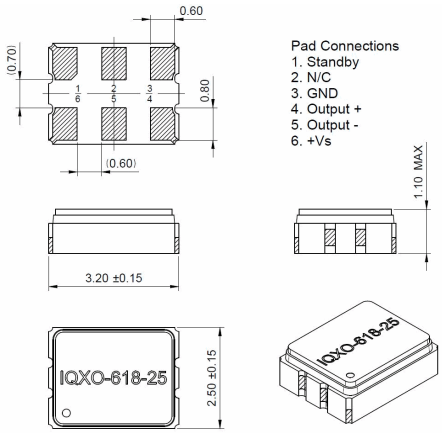

Recommended Solder Pad Layout

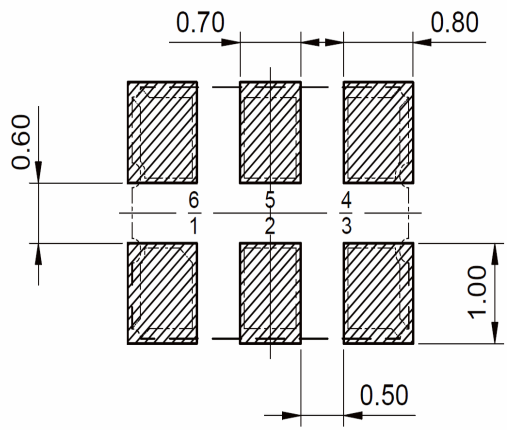

ISSUE 4; December 2023

Environmental Parameters

- Storage Temperature Range: -55 to 125°C
- Drop Test (JIS-C0044): the specimen is measured for frequency before the test. It is then dropped from a height of 100cm min as a free fall object onto a hard wooden plate of thickness 30mm min.
- Vibration (MIL-STD-883F : 2007.3): the specimen is measured for frequency before the test. Test in X,Y and Z axes for the vibration test. Frequency range: 20~2000Hz, peak to peak amplitude: 1.52mm, peak acceleration: 20G, sweep time: 20 minute/axis, pendicular total test time: 4 hours.
- Low Temp Exposure (JIS-C0020): the specimen is measured for frequency before the test. Expose device to -40°C±3°C for 168±6 hours. Measure electrical performance after leaving 1~2 hours at room temperature.
- Ageing Test (JIS-C0021): the specimen is measured for frequency before the test. Expose device to +125°C±3°C for 720±48 hours. Measure electrical performance after leaving 1~2 hours at room temperature.
- High Temperature and Humidity (MIL-STD-883F : 1004.7): the specimen is measured for frequency before the test. Expose device to +85°C±5°C and 85±5% humidity for 168±6 hours. Measure electrical performance after leaving 1~2 hours at room temperature.
- Temperature Cycle Test (MIL-STD-883F : 1010.8): the specimen is measured for frequency before the test. Expose device to 100 cycles of:
  Low temp: -55°C±3°C for15±3 min
  Ramp up to high temp: 2-3 mins
  High temp:+125°C±3°C for15±3 min
  Ramp down to low temp: 2-3 mins
  Measure electrical performance after leaving 1~2 hours at room temperature.

Ordering Information

- *Minimum info required
  Frequency*
  Model*
  Output
  Frequency Stability (over operating temperature range)*
  Operating Temperature Range*
  Supply Voltage
- Example
  20.0MHz IQXO-618-25
  LVDS ±30ppm –40 to 85C 2.5V

Compliance

- RoHS Status (2015/863/EU) Compliant
- REACh Status Compliant
- MSL Rating (JDEC-STD-033): Not Applicable

Packaging Details

- Tape & reel in accordance with EIA-481
  Quantities below the standard reel size to be supplied on cut tape.

  Standard Reel Quantity: 3,000 Pieces

ISSUE 4; December 2023

Electrical Specification - maximum limiting values 2.5V ±5%

Frequency	Frequency Max	Temperature Range	Stability Min	Current Draw	Rise and Fall Time (20-80%)	Duty Cycle
		°C	ppm	mA	ns	%
13.5MHz	99.999999MHz	-10 to 70	±25.0	50	1	45/55%
		-40 to 85	±30.0	50	1	45/55%
		-40 to 125	±70.0	50	1	45/55%
		-40 to 105	±50.0	50	1	45/55%
100.0MHz	156.25MHz	-10 to 70	±25.0	50	0.5	45/55%
		-40 to 85	±30.0	50	0.5	45/55%
		-40 to 125	±70.0	50	0.5	45/55%
		-40 to 105	±50.0	50	0.5	45/55%

This document was correct at the time of printing; please contact your local sales office for the latest version.
Click to view latest version on our website.

Crystal Clock Oscillator Specification
IQXO-618-33

ISSUE 4; December 2023

Description

- LVDS output crystal oscillator in a hermetically sealed ceramic package with a seam sealed metal lid.
- Developed Frequencies: 25.0MHz, 50.0MHz, 80.0MHz, 100.0MHz, 125.0MHz, 133.3330MHz, 148.50MHz and 156.250MHz
- Note: Operating temperature ranges -40 to 105°C and -40 to 125°C are intended for industrial use and not for safety critical applications such as automotive. Please contact IQD for alternative options.

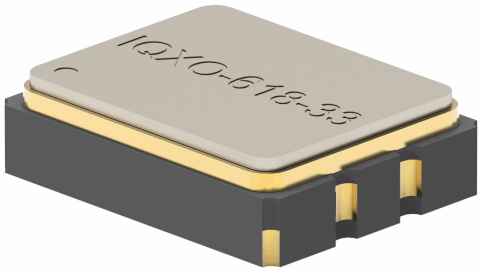

Frequency Parameters

- Frequency 13.50MHz to 156.250MHz
- Frequency Stability ±25.00ppm to ±100.00ppm
- Ageing ±3ppm max per year at 25°C

Electrical Parameters

- Supply Voltage 3.3V ±5%

Operating Temperature Ranges

- -10 to 70°C
- -40 to 85°C
- -40 to 105°C
- -40 to 125°C

Output Details

- Output Compatibility LVDS
- Drive Capability 100Ω
- Differential Output Voltage (VOD): 0.247V min, 0.33V typ, 0.454V max
- Offset Voltage (VOS): 1.125V min, 1.25V typ, 1.375V max.
- Output Voltage Levels:
  Output Low (VOL): 0.9V min
  Output High (VOH): 1.6V max

Output Control

- Standby Operation:
  Logic '1' (≥70% Vs) to pad 1 enables oscillator output.
  Logic '0' (≤30% Vs) to pad 1 disables oscillator output; when disabled the oscillator output goes to the high impedance state.
  No connection to pad 1 enables oscillator output.
- Start-up Time: 10ms max
- Standby Current: 10µA max

Noise Parameters

- Phase Jitter (12kHz to 20MHz): 300fs rms max
- Phase Jitter (12kHz to 20MHz):
  @100MHz: 137fs rms typ
  @125MHz: 118fs rms typ
  @156.25MHz: 83fs rms typ

Outline (mm)

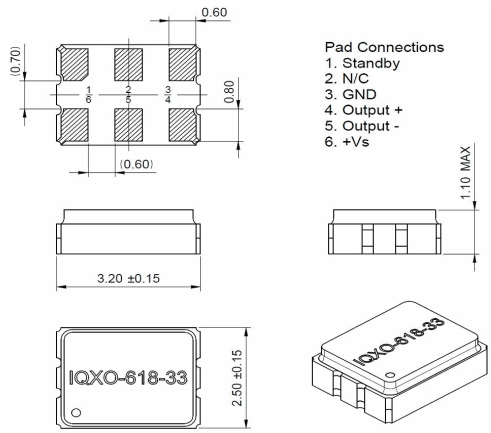

Recommended Solder Pad Layout

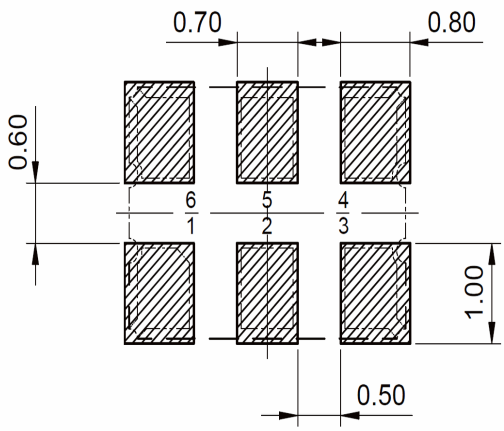

ISSUE 4; December 2023

Environmental Parameters

- Storage Temperature Range: -55 to 125°C
- Drop Test (JIS-C0044): the specimen is measured for frequency before the test. It is then dropped from a height of 100cm min as a free fall object onto a hard wooden plate of thickness 30mm min.
- Vibration (MIL-STD-883F : 2007.3): the specimen is measured for frequency before the test. Test in X,Y and Z axes for the vibration test. Frequency range: 20~2000Hz, peak to peak amplitude: 1.52mm, peak acceleration: 20G, sweep time: 20 minute/axis, pendicular total test time: 4 hours.
- Low Temp Exposure (JIS-C0020): the specimen is measured for frequency before the test. Expose device to -40°C±3°C for 168±6 hours. Measure electrical performance after leaving 1~2 hours at room temperature.
- Ageing Test (JIS-C0021): the specimen is measured for frequency before the test. Expose device to +125°C±3°C for 720±48 hours. Measure electrical performance after leaving 1~2 hours at room temperature.
- High Temperature and Humidity (MIL-STD-883F : 1004.7): the specimen is measured for frequency before the test. Expose device to +85°C±5°C and 85±5% humidity for 168±6 hours. Measure electrical performance after leaving 1~2 hours at room temperature.
- Temperature Cycle Test (MIL-STD-883F : 1010.8): the specimen is measured for frequency before the test. Expose device to 100 cycles of:
  Low temp: -55°C±3°C for15±3 min
  Ramp up to high temp: 2-3 mins
  High temp:+125°C±3°C for15±3 min
  Ramp down to low temp: 2-3 mins
  Measure electrical performance after leaving 1~2 hours at room temperature.

Ordering Information

- *Minimum info required
  Frequency*
  Model*
  Output
  Frequency Stability (over operating temperature range)*
  Operating Temperature Range*
  Supply Voltage
- Example
  20.0MHz IQXO-618-33
  LVDS ±30ppm –40 to 85C 3.3V

Compliance

- RoHS Status (2015/863/EU) Compliant
- REACh Status Compliant
- MSL Rating (JDEC-STD-033): Not Applicable

Packaging Details

- Tape & reel in accordance with EIA-481
  Quantities below the standard reel size to be supplied on cut tape.

  Standard Reel Quantity: 3,000 Pieces

ISSUE 4; December 2023

Electrical Specification - maximum limiting values 3.3V ±5%

Frequency	Frequency Max	Temperature Range	Stability Min	Current Draw	Rise and Fall Time	Duty Cycle
		°C	ppm	mA	ns	%
13.5MHz	99.999999MHz	-10 to 70	±25.0	50	1	45/55%
		-40 to 85	±30.0	50	1	45/55%
		-40 to 125	±70.0	50	1	45/55%
		-40 to 105	±50.0	50	1	45/55%
100.0MHz	156.25MHz	-10 to 70	±25.0	50	0.5	45/55%
		-40 to 85	±30.0	50	0.5	45/55%
		-40 to 125	±70.0	50	0.5	45/55%
		-40 to 105	±50.0	50	0.5	45/55%

This document was correct at the time of printing; please contact your local sales office for the latest version.
Click to view latest version on our website.

Sales Office Contact Details:
UK: +44 (0)1460 270200
USA: +1 760 668 8935
Email: info@iqdfrequencyproducts.com
Web: www.iqdfrequencyproducts.com