Crystal Clock Oscillator Specification
CFPS-73

ISSUE 14; January 2024

Description

- Standard 7 x 5mm crystal oscillator in a ceramic package with a seam sealed metal lid, hermetically sealed.
  Stock parts are available.
  Fast Make capability: CFPP-73 series programmable oscillators are the nearest equivalent fast make model.

Frequency Parameters

- Frequency 500.0kHz to 157.0MHz
- Frequency Stability ±20.00ppm to ±100.00ppm
- Ageing ±3ppm per year max

Electrical Parameters

- Supply Voltage 3.3V ±10%
- Note: parameters are referenced to 15pF load

Operating Temperature Ranges

- 0 to 70°C
- -40 to 85°C

Output Details

- Output Compatibility HCMOS
- Start up time: 10ms max.
  0.9ms typ to 90% of final amplitude (under ideal conditions @ 25°C)

Drive Capability	
0.5MHz to 50.0MHz	15pF std, 50pF max
50.0MHz to 80.0MHz	15pF std, 30pF max
80.0MHz to 157.0MHz	15pF max

Output Control

- Standby Operation:
  Logic '1' (>70% VS) to pad 1 enables oscillator output
  Logic '0' (<30% VS) to pad 1 disables oscillator output; the oscillator output goes to the high impedance state
  No connection to pad 1 enables oscillator output
  Standby Current: 10µA max, 0.9µA typ @ 25°C

Noise Parameters

- Phase Noise @125MHz (typical):
  10Hz -54dBc
  100Hz -92dBc
  1kHz -130dBc
  10kHz -149dBc
  100kHz -159dBc
  1MHz -163dBc
- RMS Phase Jitter @125MHz: 52fs typical

Environmental Parameters

- Shock: MIL-STD-202, Method 213, Condition E
- Vibration: MIL-STD-883, Method 2007, Condition A
- Storage Temperature Range: -55 to 125°C

Outline (mm)

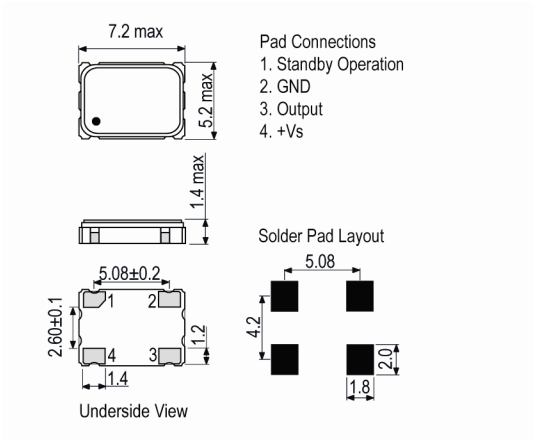

Test Circuit

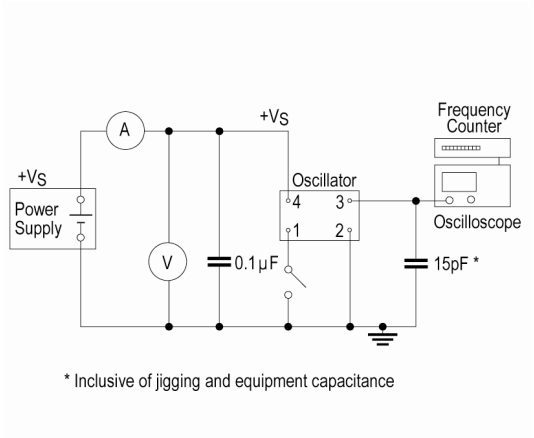

Sales Office Contact Details:

UK: +44 (0)1460 270200

USA: +1 760 318 2824

Email: info@iqdfrequencyproducts.com

Web: www.iqdfrequencyproducts.com

Manufacturing Details

- RoHS Terminations — NiAu
- RoHS Reflow — 260degC 10s

Compliance

- RoHS Status (2015/863/EU) — Compliant
- REACh Status — Compliant
- MSL Rating (JDEC-STD-033): — Not Applicable

Packaging Details

- Tape & reel in accordance with EIA-481
  Quantities below the standard reel size to be supplied on cut tape.

  Standard Reel Quantity: 1,000 Pieces

Wave Form

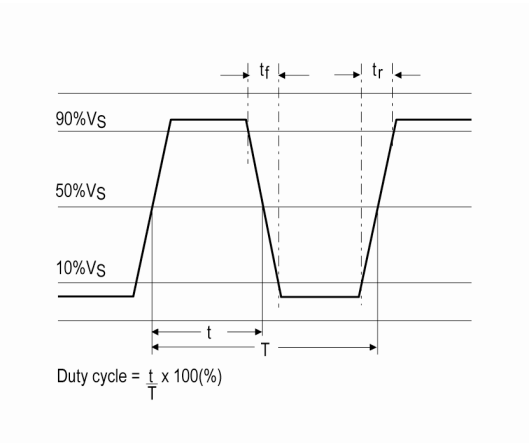

Phase Noise / Jitter

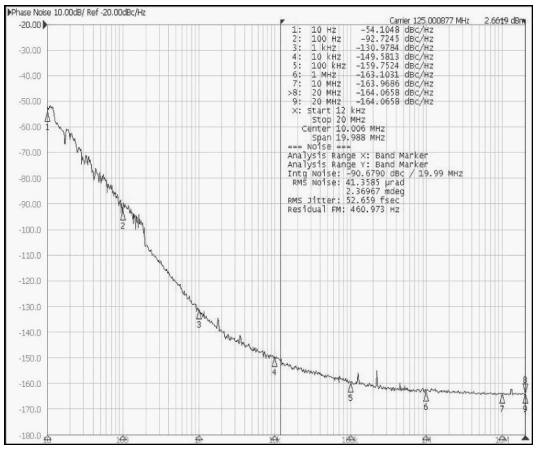

Electrical Specification - maximum limiting values @ 15pF and 3.3V ±10%

Frequency Min	Frequency Max	Temperature Range	Stability (Min)	Current Draw	Rise and Fall Time	Duty Cycle
		°C	ppm	mA	ns	%
500.0kHz	19.999999MHz	0 to 70	±20.0	7	10	45/55
		-40 to 85	±25.0	7	10	45/55
20.0MHz	31.999999MHz	0 to 70	±20.0	12	10	45/55
		-40 to 85	±25.0	12	10	45/55
32.0MHz	49.999999MHz	0 to 70	±20.0	20	10	45/55
		-40 to 85	±25.0	20	10	45/55
50.0MHz	79.999999MHz	0 to 70	±20.0	25	8	45/55
		-40 to 85	±25.0	25	8	45/55
80.0MHz	99.999999MHz	0 to 70	±20.0	30	5	45/55
		-40 to 85	±25.0	30	5	45/55
100.0MHz	157.0MHz	0 to 70	±20.0	40	4	45/55
		-40 to 85	±25.0	40	4	45/55

This document was correct at the time of printing; please contact your local sales office for the latest version.
Click to view latest version on our website.

Sales Office Contact Details:
UK: +44 (0)1460 270200
USA: +1 760 318 2824
Email: info@iqdfrequencyproducts.com
Web: www.iqdfrequencyproducts.com